HYDRA RAM®

DEMOLITION & RECYCLING EQUIPMENT DEMOLITION & RECYCLING EQUIPMENT DEMOLITION & RECYCLING EQUIPMENT



Demolition Line



WWW.HYDRARAM.COM

Demolition Line



INDEX

Page 4	FX SERIES	Hydraulic Hammers
Page 6	MK SERIES	Multiprocessors
Page 10	HCC SERIES	Concrete Crushers
Page 12	HSS SERIES	Scrap / Steel Shears
Page 14	HFP SERIES	Fixed Pulverizers
Page 16	HRP SERIES	Rotating Pulverizers
Page 18	HDG SERIES	Demolition Grabs
Page 20	HSG-N SERIES	Demolition- & Sorting Grabs
Page 22	HCB SERIES	Crushing Buckets
Page 24	HSB SERIES	Screening Buckets
Page 26	HC SERIES	Pile Drivers / Compactors


MB Abbruchtechnik
MB
MB

HYDRA RAM®

DEMOLITION & RECYCLING EQUIPMENT



14 MODELS HYDRAULIC HAMMERS FROM 100 UP TO 7400 KGS
FOR EXCAVATORS FROM 1 ~ 100 TONS

HYDRAULIC HAMMERS

FX SERIES

Soundproofed	Less noise (sound proofed housing)
Vibration Damper	Vibration Damper absorbs recoil energy of the hammer and reduces wear on the excavator
Bigger Nitrogen chamber	Increases impact energy
Frequency Valve	Variable stroke frequency
Bigger control valve	Oversized control valve is 10 to 15% more efficient than other systems. Result: Hammer gets less hot and has greater blow energy
Auto Lube	Automatic lubrication system (optional)
Accumulator	Accumulator absorbs peak pressures and increases the efficiency of the hammer = less strain / wear on the hydraulics of the excavator
Heavy Duty housing	Housing wear parts made of HARDOX ®steel
Retainer pin	Oversized retainer pin ensures a long life
Piston	Higher impact energy through longer stroke
Chisel	Longer life due to special hardening process

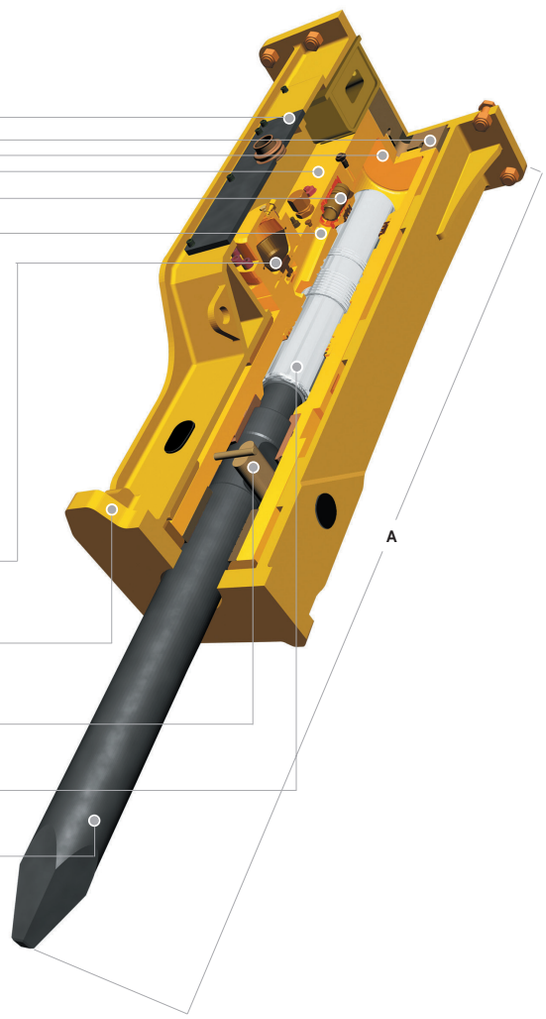

		FX-10	FX-20	FX-30	FX-40	FX-50	FX-70	FX-90	FX-120	FX-160	FX-200	FX-220	FX-340	FX-500	FX-800
(1)	t.	0.8-2.0	1.5-3.0	2-4	3-5	4-7	6-9	7-12	10-16	14-18	16-24	19-26	28-40	42-55	60-100
*	kg.	100	135	160	195	320	410	550	920	1320	1580	1900	2500	4150	7400
A	mm.	1180	1210	1240	1280	1580	1683	1950	2240	2640	2700	2860	3170	3610	4445
1/min	s/pm	700-1200	700-1200	550-1000	500-900	500-800	400-800	400-700	400-700	400-600	400-600	400-600	300-400	250-350	200-400
	bar	80-100	100-120	100-120	110-130	140-160	140-160	140-160	150-170	150-180	160-180	160-180	160-180	160-180	190-210
	bar	120-140	140-160	140-160	150-170	180-200	180-200	180-200	190-210	190-220	200-220	200-220	200-220	200-220	230-250
	l/min.	10-20	15-25	25-40	30-50	35-65	40-70	45-85	80-120	100-140	110-150	130-170	170-230	200-300	290-370
Ø	mm.	36	45	53	60	68	75	90	100	125	135	140	155	175	210

(*) The above mentioned weight is without connection plate
(1) Recommended excavator / attachment combination

HYDRA RAM®

DEMOLITION & RECYCLING EQUIPMENT



9 MODELS MULTIPROCESSORS
FOR EXCAVATORS FROM 6 ~ 100 TONS
6 DIFFERENT JAWS FOR ALL DEMOLITION SOLUTIONS

MULTIPROCESSORS

MK SERIES

		MK 7* NEW	MK 10*	MK 13	MK 15	MK 20	MK 25	MK 35	MK 50 NEW	MK 70 NEW
(1)	t.	6 : 14	9 : 18	15 : 25	18 : 25	25 : 35	35 : 45	45 : 60	55 : 78	75 : 100
body only	kg.	410	600	795	1180	1465	1970	2150	3420	5020
H1**	mm.	810	1000	1055	1220	1330	1370	1375	1540	1720
	bar	280	310	310	310	310	310	310	340	340
	l/min.	80 / 150	150 / 250	180/250	180 / 250	200 / 300	250 / 350	300 / 400	400 / 500	450 / 600
max	bar	140	140	140	140	140	140	140	140	140
max	l/min.	10	10	10	10	10	10	10	30	30
open/close	sec.	1,1/2,0	1,1/2,0	1,5/2,1	1,6/2,1	2,0/2,7	2,6/2,7	2,6/2,7	3,2/3,5	3,0/3,7

(*) Mechanical version
(**) H = H1 + H2
(1) Recommended excavator / attachment combination

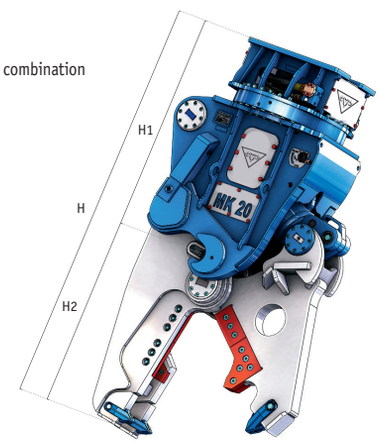

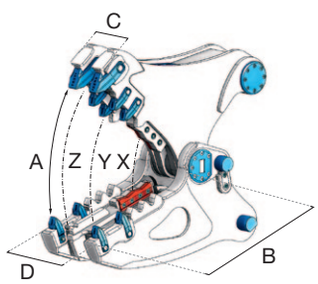

		Pulverizer Jaw								
		MK 7	MK 10	MK 13	MK 15	MK 20	MK 25	MK 35	MK 50	MK 70
jaw only	kg.	250	410	635	680	1035	1270	1720	2940	3940
A	mm.	530	660	720	740	880	905	970	1100	1300
B	mm.	510	610	630	660	790	820	860	1030	1130
C	mm.	175	220	235	300	310	360	390	440	500
D	mm.	305	355	390	465	485	570	640	720	770
	mm.	140	140	180	220	260	260	260	260	325
H2**	mm.	660	780	870	890	1045	1100	1210	1440	1580
X	t.	75	85	125	190	205	290	330	400	535
Y	t.	41	60	65	100	125	135	180	220	285
Z	t.	30	40	50	65	80	105	115	140	190

HYDRA RAM®

DEMOLITION & RECYCLING EQUIPMENT



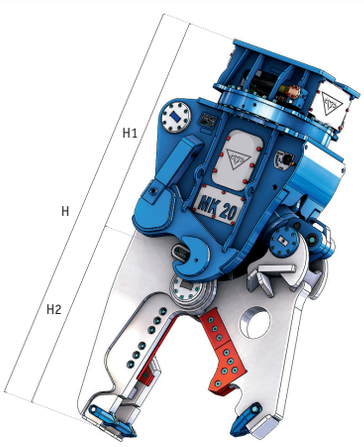



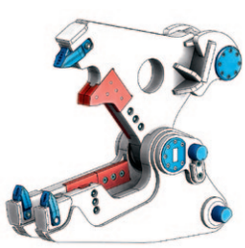

		Steel Jaw									Combi Jaw							
		MK 7	MK 10	MK 13	MK 15	MK 20	MK 25	MK 35	MK 50	MK 70	MK 10	MK 13	MK 15	MK 20	MK 25	MK 35	MK 50	MK 70
jaw only	kg.	210	360	580	630	950	1240	1425	2290	2850	450	585	720	1090	1305	1780	2900	3890
A	mm.	250	340	400	420	480	500	525	575	700	580	640	740	810	850	910	990	1160
B	mm.	325	400	450	485	525	560	565	660	755	560	700	740	800	815	875	1065	1180
C	mm.	65	75	80	100	120	130	130	135	165	100	100	110	130	130	130	175	185
D	mm.	250	300	300	330	380	435	435	480	550	290	310	320	350	415	410	560	610
	mm.	310	370	410	470	510	565	565	660	755	350	400	420	480	500	500	575	640
H2**	mm.	545	630	725	775	890	935	990	1150	1300	800	920	1000	1125	1155	1255	1490	1640
X	t.	175	250	310	380	515	720	740	875	1100	220	270	360	510	630	740	900	1010
Y	t.	70	100	120	155	235	290	315	385	470	60	65	95	125	155	175	220	290
Z	t.	40	60	75	85	125	145	160	205	240	40	50	60	80	105	115	140	185

MULTIPROCESSORS

MK SERIES

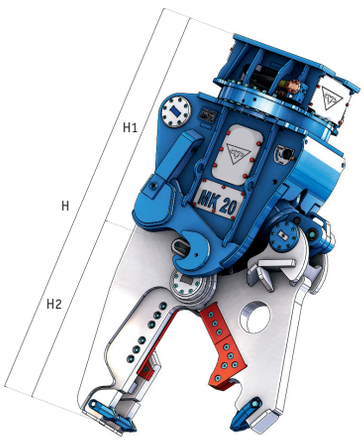

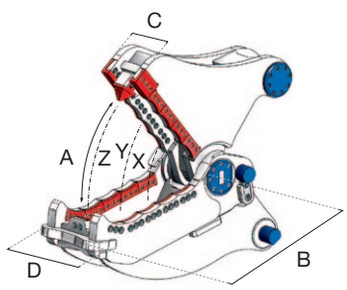

		Universal Jaw								
		MK 7	MK 10	MK 13	MK 15	MK 20	MK 25	MK 35	MK 50	MK 70
jaw only	kg.	440	520	610	740	1000	1300	1590	2650	3390
A	mm.	380	420	445	500	635	550	720	900	1020
B	mm.	420	490	580	615	750	785	960	880	940
C	mm.	165	200	235	275	295	350	350	440	490
D	mm.	290	370	335	395	415	475	475	710	760
	mm.	380	440	530	530	660	600	750	840	900
H2**	mm.	740	830	900	910	1080	1100	1280	1495	1630
X	t.	120	160	245	260	375	720	740	470	610
Y	t.	60	75	105	115	150	215	220	275	385
Z	t.	40	50	60	80	100	130	135	165	215

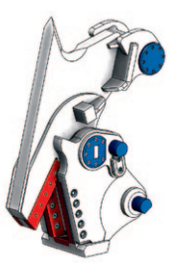



		Tankshear Jaw							Demolition Jaw							
	MK 10	MK 13	MK 15	MK 20	MK 25	MK 35	MK 50	MK 70	MK-7	MK 10	MK 13	MK 15	MK 20	MK 25	MK 35	MK 50	MK 70
jaw only kg.	320	420	560	1000	1400	1750	1900	2360	360	435	575	680	1075	1235	1700	2750	3120
A mm.	180	240	270	350	370	400	400	440	575	605	680	745	870	880	925	1010	1200
B mm.	300	330	360	465	520	780	560	630	580	610	710	740	765	815	875	1070	1150
C mm.	90	105	115	145	150	160	170	180	85	100	100	110	130	130	130	175	170
D mm.	280	290	310	390	440	480	475	490	280	300	300	340	350	400	450	550	510
mm.	280	405	320	400	430	480	460	530	105	150	200	175	240	250	250	290	325
H2** mm.	410	470	505	630	695	750	910	1020	705	810	925	1005	1125	1170	1275	1500	1640
X t.	145	175	220	270	320	350	425	550	115	135	165	220	290	350	385	465	1100
Y t.	90	130	150	200	225	230	305	440	50	60	75	90	130	150	180	220	270
Z t.	75	90	110	140	160	170	210	270	35	40	50	65	85	105	115	140	175

HYDRA RAM®

DEMOLITION & RECYCLING EQUIPMENT





14 MODELS CONCRETE CRUSHERS FROM 180 UP TO 12.000 KGS
FOR EXCAVATORS FROM 2 ~ 150 TONS

CONCRETE CRUSHERS

HCC SERIES



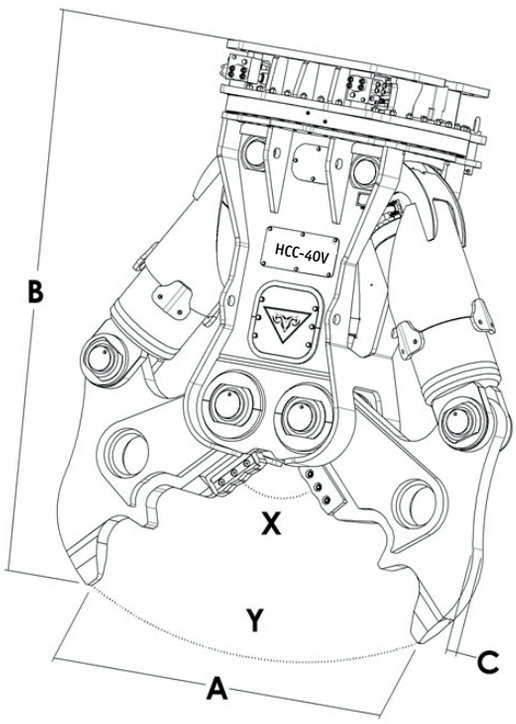

		HCC-2V	HCC-3V	HCC-5V*	HCC-10V*	HCC-13V*	HCC-17V*	HCC-22V*	HCC-27V*	HCC-40V	HCC-50V	HCC-65V	HCC-85V	HCC-100V	HCC-120V
(1)	t.	2 : 4	4 : 7	5 : 9	10 : 15	20 : 25	16 : 21	22 : 28	29 : 35	36 : 49	50 : 65	66 : 85	85 : 105	86 : 130	86 : 150
**	kg.	180	350	550	1020	1320	1680	2130	2640	3820	4850	6430	8550	10750	12200
A	mm.	280	358	480	685	610	820	890	1090	1370	1500	1680	1830	2050	2305
B	mm.	1020	1165	1300	1550	1750	1775	1900	2115	2520	2690	2950	3160	3350	3700
C	mm.	25	35	50	60	60	70	70	80	90	100	100	120	120	130
	mm.	90	140	140	140	180	180	180	220	260	325	325	325	400	400
X	t.	60	80	80	160	180	170	205	220	365	470	590	720	760	820
Y	t.	18	22	20	45	45	60	70	75	85	120	145	185	220	240
	t.	20	30	40	80	60	100	115	125	155	215	260	335	395	395
	N°	1	1	2	2	1	2	2	2	2	2	2	2	2	2
	bar	210	210	250	310	310	310	310	310	310	340	340	340	340	340
	l/min.	40/60	60/80	80/150	150/250	180/250	180/250	200/300	250/350	300/400	350/450	400/500	450/650	500/800	500/800
	bar	120	120	120	140	140	140	140	140	140	140	140	140	140	140
	l/min.	5	5	10	10	10	10	10	10	10	30	30	50	50	50
	open/close sec.	1,1/1,3	1,2/1,2	0,8/1,4	0,9/1,7	0,9/1,6	1,7/3,3	1,8/3,4	2,0/2,6	3,5/3,1	3,6/3,9	3,8/4,1	3,8/3,9	3,7/4,0	3,7/4,1

(*) Equipped with exchangeable teeth
(**) The above mentioned weight is without connection plate
(1) Recommended excavator / attachment combination

HYDRA RAM®

DEMOLITION & RECYCLING EQUIPMENT

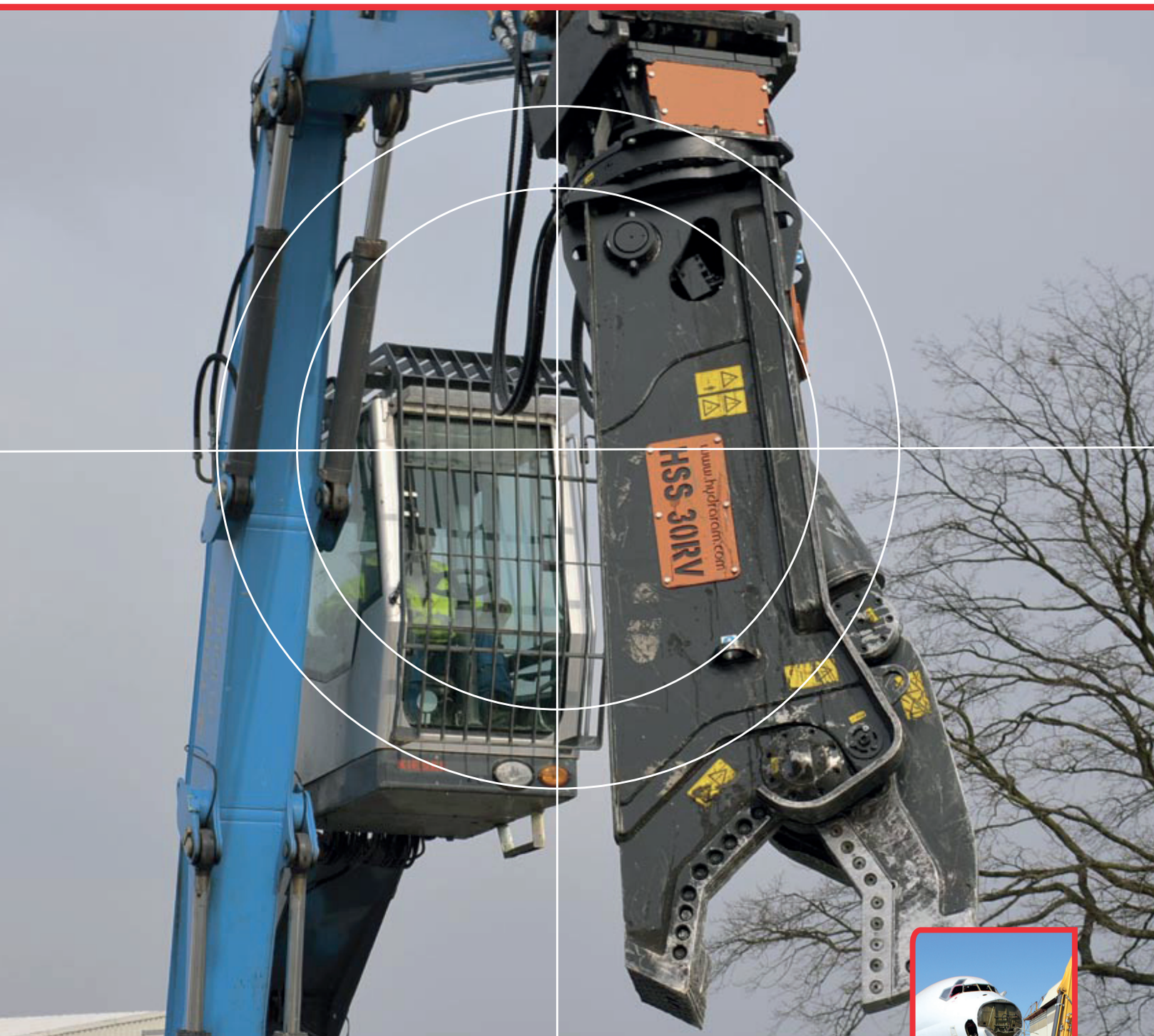

12 MODELS SCRAP / STEEL SHEARS FROM 450 UP TO 20.000 KGS
FOR EXCAVATORS FROM 3 ~ 280 TONS

SCRAP / STEEL SHEARS

HSS SERIES

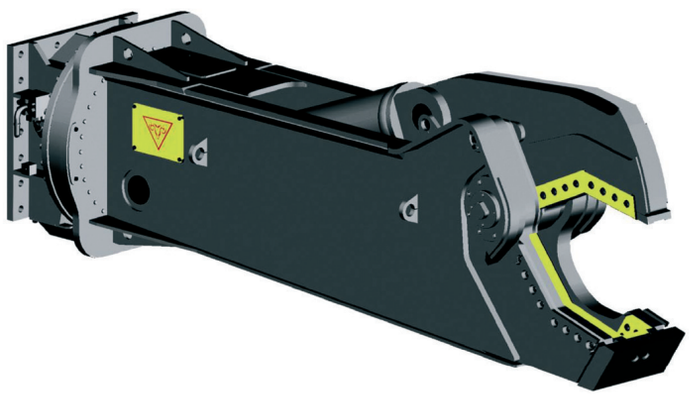

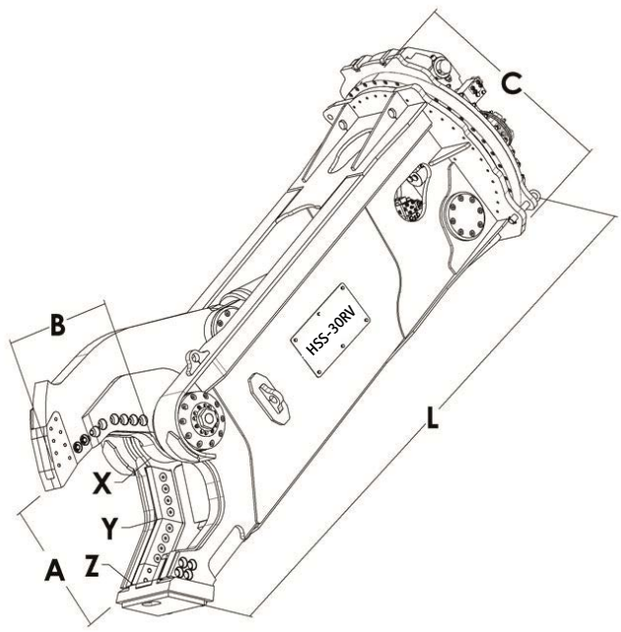

		HSS-3RV	HSS-5RV	HSS-8RV	HSS-12RV	HSS-18RV	HSS-25RV	HSS-30RV	HSS-40RV	HSS-55RV	HSS-70RV	HSS-90RV	HSS-200RV
*(1)	t.	2 : 3	2,5 : 4	4 : 7	7 : 10	10 : 16	16 : 20	20 : 25	25 : 30	30 : 40	45 : 55	70 : 90	140 : 190
**	t.	4 : 5	5 : 8	8 : 12	12 : 18	18 : 23	23 : 30	30 : 38	40 : 50	55 : 70	75 : 100	120 : 150	200 : 280
***	kg.	300	450	750	1180	1650	2350	2800	3900	5650	7180	9250	19160
A	mm.	265	340	405	475	535	575	615	680	780	845	920	1180
B	mm.	230	320	355	385	445	495	545	600	690	710	780	1130
C	mm.	380	460	460	570	715	715	715	865	1000	1100	1200	1750
L	t.	1330	1725	2050	2300	2660	2900	3110	3420	3905	4190	4400	5580
	t.	28	35	65	72	80	140	170	200	215	280	355	480
X	t.	95	125	210	225	250	460	550	600	700	815	1075	1540
Y	t.	45	50	90	95	110	210	230	270	290	375	480	690
Z	t.	25	25	50	55	60	105	125	145	160	205	265	350
	bar	220	250	310	310	310	340	340	340	340	340	340	340
	l/min	80/100	80/150	100/150	150/250	180/250	200/300	200/300	300/400	400/500	450/600	500/800	900/1200
	bar	120	120	120	140	140	140	140	140	140	140	140	140
	l/min	5	10	10	10	10	10	10	10	30	30	50	50
	open/close sec.	1,0/2,8	1,0/2,0	1,9/3,6	1,9/2,5	2,0/2,8	2,9/2,9	3,9/4,1	3,4/4,0	3,0/4,1	3,8/4,7	3,9/4,6	4,1/4,9

(*) Machinery Class for mounting to main arm
(**) Machinery Class for mounting on dipperstick
(***) The above mentioned weight is without connection plate
(1) Recommended excavator / attachment combination

HYDRA RAM®

DEMOLITION & RECYCLING EQUIPMENT



7 MODELS FIXED PULVERIZERS FROM 550 UP TO 6500 KGS
FOR EXCAVATORS FROM 6 ~ 85 TONS

FIXED PULVERIZERS

HFP SERIES



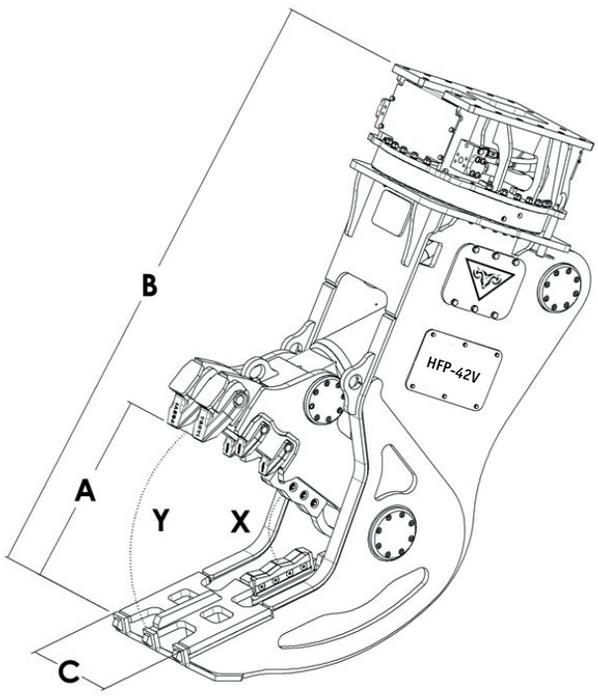

		HFP-5V	HFP-12V	HFP-20V	HFP-25V	HFP-32V	HFP-42V	HFP-65V
(1)	t.	6 : 10	13 : 17	18 : 25	25 : 32	33 : 45	42:68	65 : 85
*	kg.	550	1190	1910	2490	3070	4120	6430
A	mm.	475	690	810	870	950	1100	1250
B	mm.	1330	1740	1850	1955	2100	2400	2670
C	mm.	330	420	470	570	650	740	800
	mm.	140	220	260	260	260	300	325
X	t.	70	150	200	235	275	370	415
Y	t.	25	65	80	95	105	140	170
	t.	45	100	125	155	170	220	280
	bar	250	310	310	310	310	340	340
	l/min.	40/60	120/200	200/300	250/350	300/400	350/500	450/600
open/close	sec.	3,4/5,3	2,0/2,6	2,0/2,7	3,0/3,2	2,8/2,7	2,6/2,9	3,0/3,7

(*) The above mentioned weight is without connection plate
(1) Recommended excavator / attachment combination

HYDRA RAM®

DEMOLITION & RECYCLING EQUIPMENT

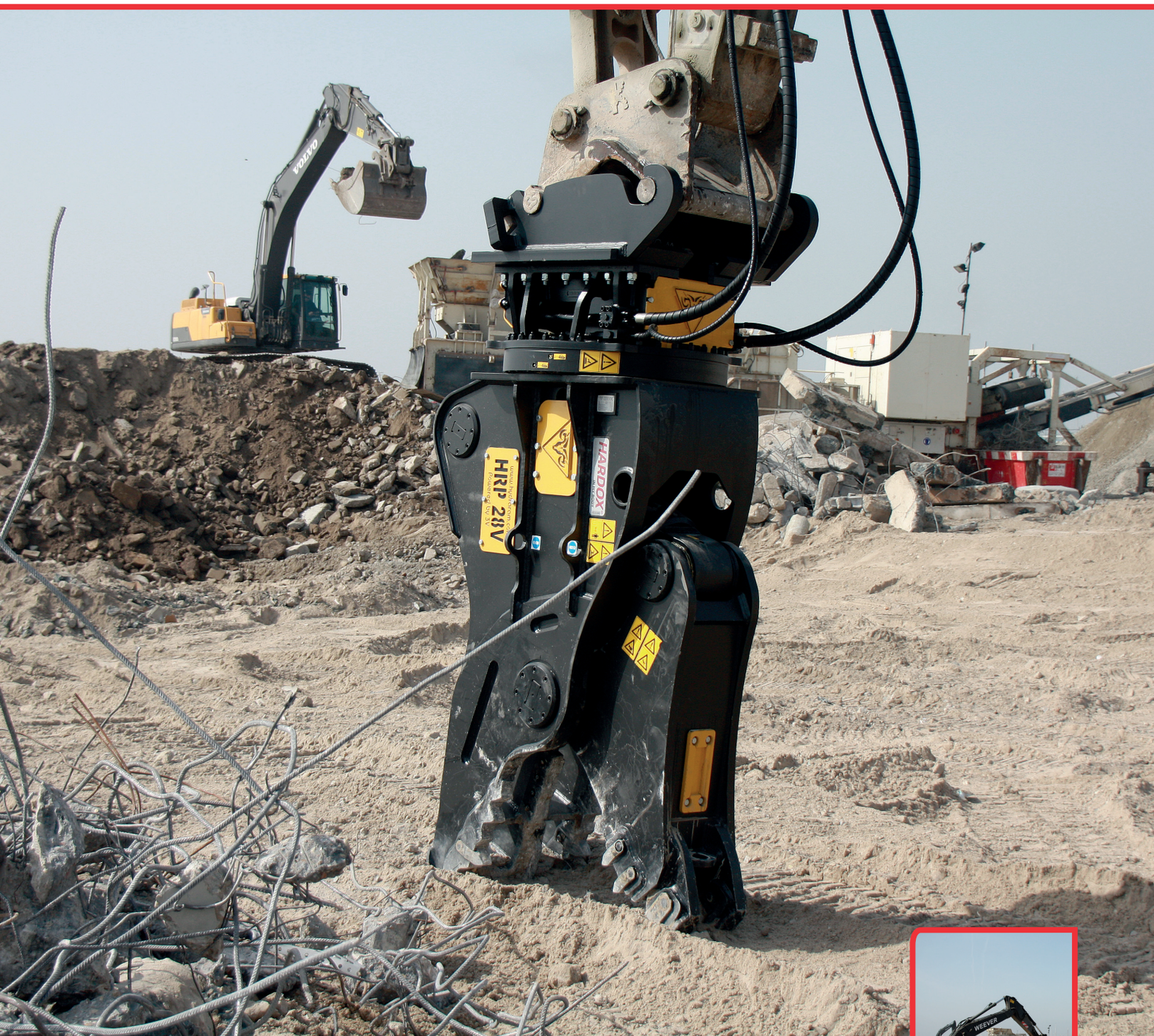



11 MODELS ROTATING PULVERIZERS FROM 920 UP TO 25.000 KGS
FOR EXCAVATORS FROM 9 ~ 250 TONS

ROTATING PULVERIZERS

HRP SERIES



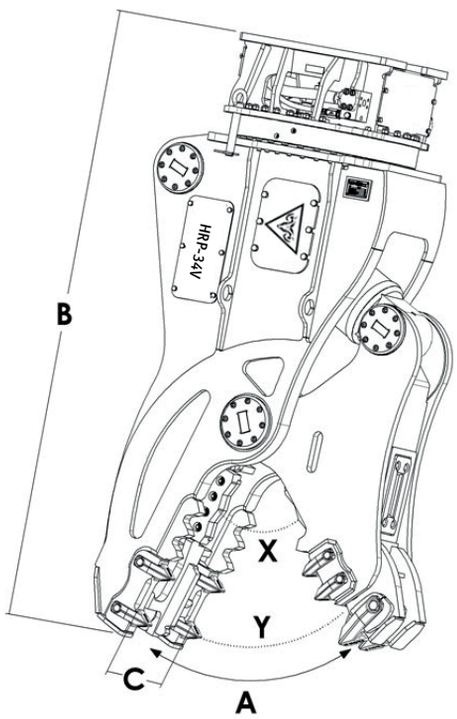

		HRP-10V*	HRP-14V*	HRP-17V*	HRP-22V*	HRP-28V*	HRP-34V*	HRP-52V*	HRP-72V*	HRP-110V*	HRP-200V*	HRP-250V*
*(1)	t.	9 : 12	13 : 15	16 : 21	22 : 28	29 : 35	36 : 50	51 : 67	68 : 85	86 : 130	100 : 200	100 : 250
**	kg.	920	1320	1650	2210	2840	3450	5190	7250	11450	20580	24640
A	mm.	655	705	745	870	915	980	1120	1320	1700	1900	2050
B	mm.	1730	1920	2050	2330	2420	2500	2840	3250	3850	4480	5140
	mm.	360	410	450	505	600	640	735	790	970	1400	1400
X	t.	140	220	220	260	260	260	260	325	500	500	500
Y	t.	85	140	190	205	230	350	380	490	545	860	990
	t.	40	55	65	80	105	120	140	180	235	380	410
	bar	65	80	100	125	155	170	215	280	395	670	670
	l/min.	150/250	180/250	180/250	200/300	250/350	300/400	400/500	450/600	500/800	900/1200	900/1200
	max bar	140	140	140	140	140	140	140	140	140	140	140
	max l/min.	10	10	10	10	10	10	30	30	50	50	50
	open/close sec.	1,4/2,7	1,4/2,9	2,3/2,9	2,9/3,9	3,0/3,2	3,7/3,7	3,2/3,5	3,0/3,7	4,3/4,4	6,9/7,0	6,9/7,0

(*) Equipped with exchangeable teeth
(**) The above mentioned weight is without connection plate
(1) Recommended excavator / attachment combination

HYDRA RAM®

DEMOLITION & RECYCLING EQUIPMENT



23 MODELS DEMOLITION GRABS FROM 85 TO 2800 KG
FOR CARRIERS FROM 0.7 ~ 200 TONS

DEMOLITION GRABS

HDG SERIES

		HDG-75	HDG-150	HDG-200	HDG-400	HDG-450	HDG-452	HDG-500	HDG-600
(1)	t.	0,7 - 1,2	1,2 - 3	3-5	4-6	5-9	7-11	7-12	10-16
*	kg.	75	140	260	350	400	450	600	840
	bar	300	300	300	300	300	320	350	350
min	bar	170	170	170	190	190	190	190	190
max	bar	210	210	210	210	210	210	210	210
max	l/min.	15	25	35	40	50	70	90	100
	l/min.	5	10	10	12	12	15	15	25
Shell width	mm.	300	450	500	600	700	700	600	800
Spread opened	mm.	600	750	1160	1400	1500	1550	1800	1800
Height	mm.	700	700	850	950	1000	1100	1150	1200
Capacity	ltr.	30	70	100	150	200	200	300	400
Closing force	Kn.	6	15	20	23	24	24	30	35

		HDG-802	HDG-902	HDG-1002	HDG-1102	HDG-1202	HDG-1402	HDG-1702	HDG-1802
(1)	t.	12-20	13-20	15-20	16-25	17-28	20-28	23-30	24-34
*	kg.	1000	1090	1170	1400	1500	1600	1750	1800
	bar	350	350	350	350	350	350	350	350
min	bar	190	190	190	190	190	190	190	190
max	bar	210	210	210	210	210	210	210	210
max	l/min.	120	120	120	150	160	170	170	170
	l/min.	25	25	25	35	35	35	35	35
Shell width	mm.	800	900	1000	900	1000	1200	1200	1200
Spread opened	mm.	1950	1950	1950	2100	2100	2100	2250	2200
Height	mm.	1300	1300	1300	1500	1500	1500	1500	1650
Capacity	ltr.	500	600	700	750	800	850	900	900
Closing force	Kn.	46	46	46	55	68	68	80	80

		HDG-1900	HDG-2500	HDG-2700	HDG-3000	HDG-4000	HDG-5000	HDG-13000
(1)	t.	25-38	28-40	30-50	35-50	42-60	45-100	100-200
*	kg.	1900	2500	2700	3000	4000	5000	13000
	bar	350	350	350	350	350	350	350
min	bar	190	190	190	190	190	190	190
max	bar	210	210	210	210	250	250	250
max	l/min.	200	200	200	200	250	300	350
	l/min.	35	35	35	35	60	60	100
Shell width	mm.	1200	1200	1360	1500	1500	1500	1800
Spread opened	mm.	2200	2200	2200	2400	2600	3000	4400
Height	mm.	1700	1700	1750	1800	1900	2000	3000
Capacity	ltr.	950	1000	1100	1300	1500	1600	4600
Closing force	Kn.	90	90	90	90	110	130	180

(*) The above mentioned weight is without connection plate
(1) Recommended excavator / attachment combination

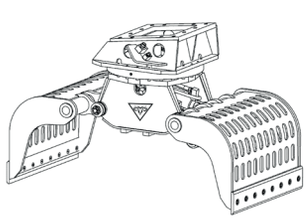

SolidWorks Manufacturing Network Partner

HARDOX® IN MY BODY

HYDRA RAM®

DEMOLITION & RECYCLING EQUIPMENT





11 MODELS DEMOLITION & SORTING GRABS FROM 75 TO 3870 KG
FOR EXCAVATORS FROM 1 ~ 65 TONS

DEMOLITION & SORTING GRABS

HSG SERIES



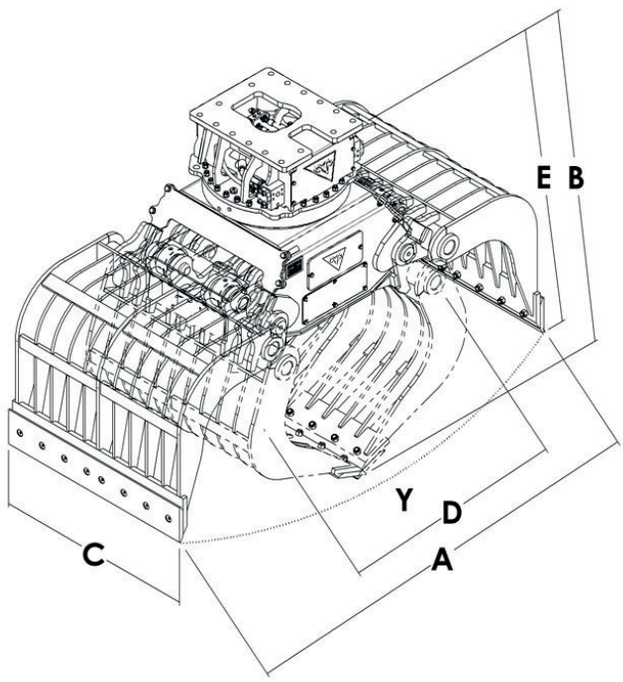

		HSG-1N	HSG-2N	HSG-3N	HSG-4N	HSG-5N	HSG-9N	HSG-12N	HSG-16N	HSG-20N	HSG-30N	HSG-40N
(1)	t.	0,6 : 1	1 : 2,5	2,5 : 4	4 : 6	6 : 8	9 : 14	15 : 19	20 : 25	23 : 30	31 : 45	46 : 65
*	kg.	75	140	200	370	420	750	1070	1530	1995	3160	3870
A	mm.	600	750	1150	1100	1490	1750	1950	2060	2455	2800	3050
B	mm.	600	750	1150	930	990	1170	1290	1410	1555	1800	2100
C	mm.	300	450	500	600	600	700	900	1000	1150	1300	1500
D	mm.	430	630	730	760	910	1050	1180	1260	1450	1700	1950
E	mm.	600	820	945	1010	1210	1320	1460	1580	1790	2020	2300
Y	m^3	0,5	1,3	1,7	2	2,5	3,5	5	6	9	12,5	15
	Nº	1	1	1	1	1	2	2	2	2	2	2
Cap. SAE	m^3	0,03	0,07	0,1	0,2	0,4	0,5	0,7	0,9	1,2	1,5	1,8
	bar	250	250	250	250	250	310	310	310	310	310	310
	l/min.	15/20	25/30	35/40	80/100	80/100	80/100	80/100	80/100	100/120	100/120	120/150
max	bar	120	120	120	120	120	140	140	140	140	140	140
max	l/min.	5	10	10	10	10	10	10	10	10	10	20

(*) The above mentioned weight is without connection plate
(1) Recommended excavator / attachment combination

HYDRA RAM®

DEMOLITION & RECYCLING EQUIPMENT

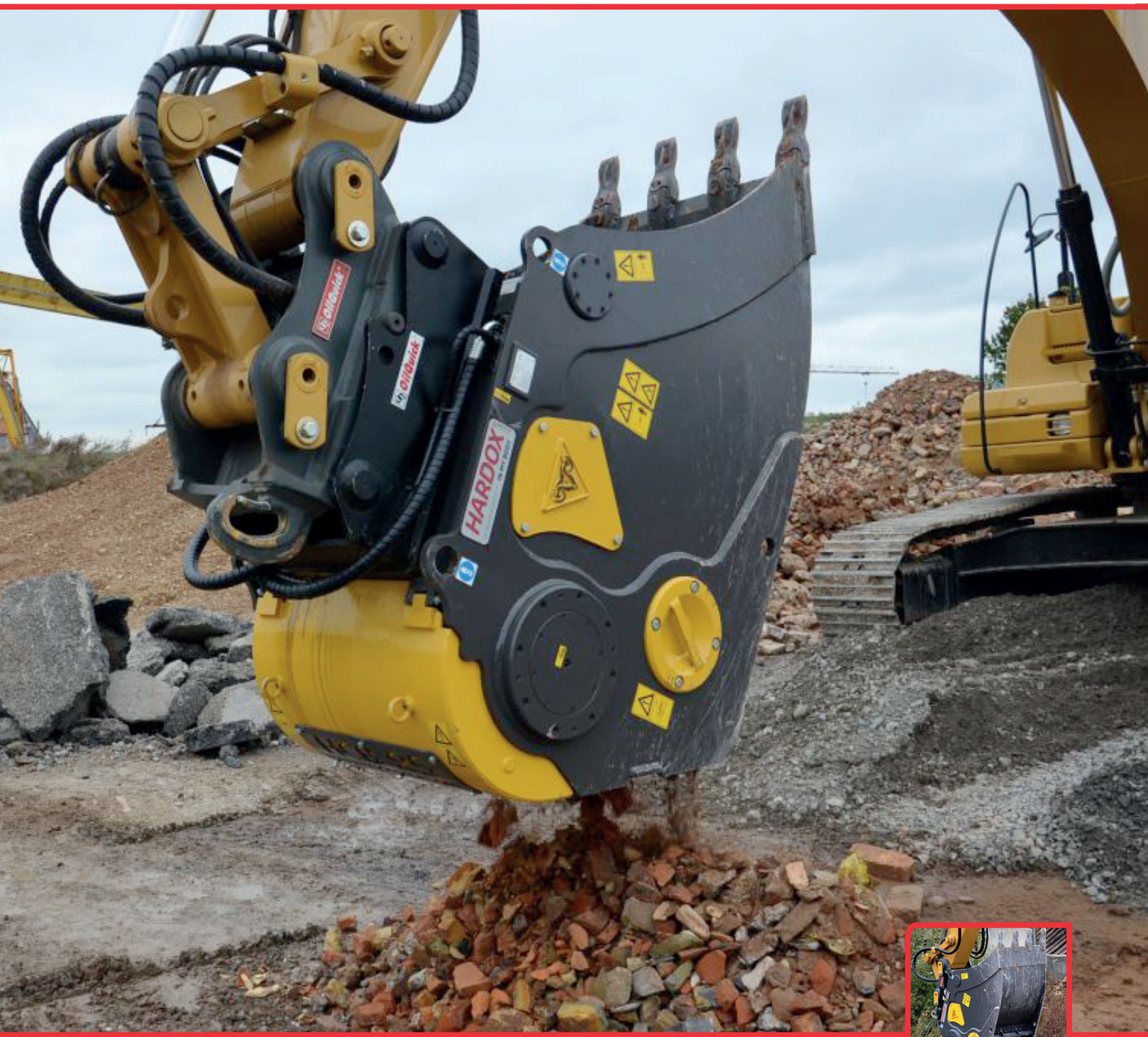

3 MODELS CRUSHING BUCKETS FROM 1500 UP TO 3500 KGS
FOR EXCAVATORS FROM 12 ~ 45 TONS

CRUSHING BUCKETS

HCB SERIES

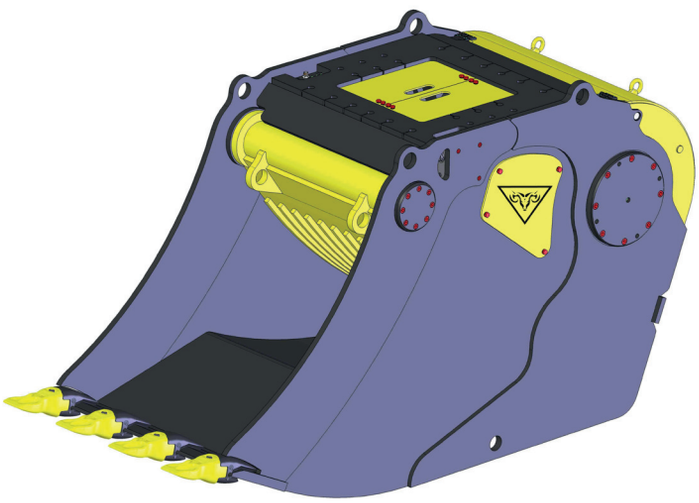

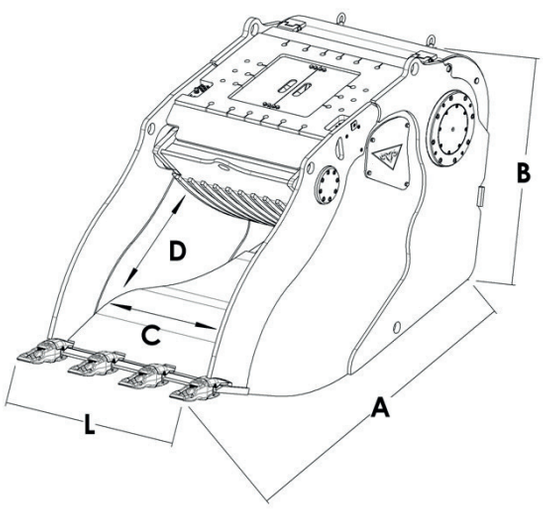

Productivity according to material/granulation

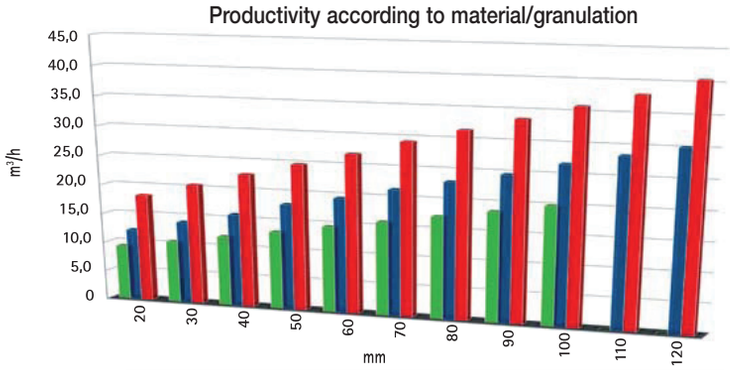

	20	30	40	50	60	70	80	90	100	110	120
HCB-15	9,3	10,5	11,9	13,2	14,6	15,9	17,3	18,6	20,0		
HCB-25	12,2	14,0	15,8	18,0	19,5	21,4	23,1	24,7	26,8	28,5	30,2
HCB-35	18,3	20,5	22,7	24,8	26,9	29,3	31,5	33,6	35,9	38,0	40,5

		HCB-15	HCB-25	HCB-35
(1)	t.	12-20	18-45	25-45
*	kg.	1500	2500	3500
	bar	200	220	220
	l/min.	150	180	180
A	mm.	2050	2450	2750
B	mm.	1180	1290	1410
C	mm.	600	750	900
D	mm.	450	550	650
L	mm.	830	970	1170
Cap. SAE	m^3	0,5	0,6	0,9
Drain line		√	√	√
Granulate setting	mm.	20/100	20/120	20/120

(*) The above mentioned weight is without connection plate
(**) Available is a electromagnet kit for HCB-15, 25 and 35
(1) Recommended excavator / attachment combination

SolidWorks Manufacturing Network Partner

HARDOX® IN MY BODY

HYDRA RAM®

DEMOLITION & RECYCLING EQUIPMENT



8 MODELS SCREENING BUCKETS FROM 110 UP TO 2250 KGS
FOR EXCAVATORS FROM 1,5 ~ 40 TONS

SCREENING BUCKETS

HSB SERIES



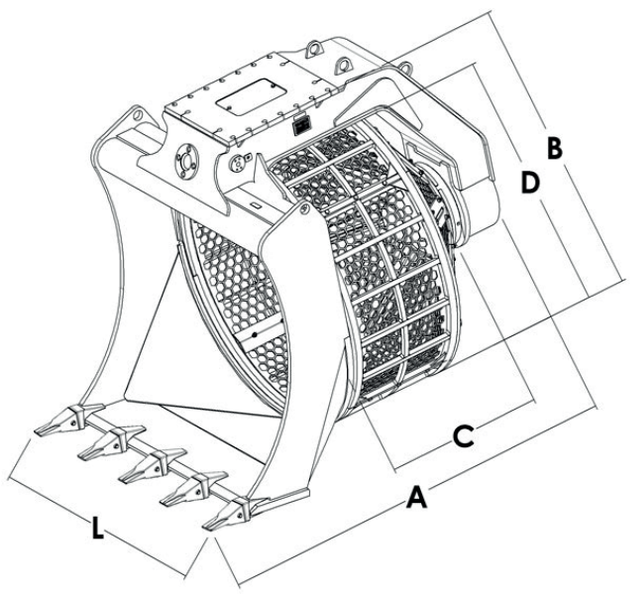

		HSB-200	HSB-300	HSB-400	HSB-700	HSB-1400	HSB-1600	HSB-1900	HSB-2600
(1)	t.	1,5 : 2,5	3 : 5	5 : 8	8 : 12	13 : 16	17 : 21	22 : 30	31 : 40
*	kg.	110	250	350	690	1320	1570	1810	2550
A	mm.	740	1070	1175	1480	1950	2190	2250	2000
B	mm.	630	805	930	1055	1460	1650	1890	190
C	mm.	320	445	515	690	790	925	980	1040
D	mm.	500	640	750	840	1170	1340	1560	1700
L	mm.	520	700	800	900	1200	1400	1600	1750
Cap. SAE	m^3	0,2	0,2	0,3	0,4	0,75	0,9	1,1	1,5
	bar	100/120	100/120	100/120	100/120	100/120	100/120	100/120	100/120
	l/min.	20/30	30/50	30/50	50/70	80/100	80/100	80/100	80/100
	rpm	24/32	18/24	18/24	18/24	18/35	18/35	18/35	18/35

(*) The above mentioned weight is without connection plate
(**) Standard delivery with 30 x 30 screenkit on the models HSB-200, 300, 400 and 700
(***) Standard delivery with 50 x 50 screenkit on the models HSB-1400 and up
(****) Other screenkits available on request
(1) Recommended excavator / attachment combination

SolidWorks Manufacturing Network Partner
HARDOX® IN MY BODY

HYDRA RAM®

DEMOLITION & RECYCLING EQUIPMENT



8 MODELS HYDRAULIC PILE DRIVERS/COMPACTORS
FULL RANGE FROM 110 TO 1150 KG
FOR CARRIERS FROM 0.8 ~ 38 TONS

PILE DRIVERS/COMPACTORS

HC SERIES



		HC-100	HC-180/2	HC-250/2	HC-420/2	HC-600/2	HC-900/2	HC-1200/2	HC-1500/2
	t.	8 - 2	2 - 3.5	3.5 - 7	6 - 10	8 - 16	15 - 28	20 - 35	22 - 38
	kg.	110	160	230	400	580	850	950	1150
	l/pm	20-30	25-40	25-40	55-85	55-85	100-130	170-210	180-220
	bar	120-140	120-140	120-140	120-140	120-140	120-140	190-215	200-220
	rpm	2200-2600	2200-3000	2200-3000	2100-2600	2100-2600	2200-2500	2400-2900	2400-2900
Output Power	KN.	10	18	25	50	55	95	155	205



MEMBER OF:

VERAS bouwt aan slopen

DA DEUTSCHER ABBRUCHVERBAND

EDA EUROPEAN DEMOLITION ASSOCIATION

NATIONAL DEMOLITION ASSOCIATION Making Way

NDC INDUSTRY SERVICE PROVIDER
National Federation of Demolition Contractors
Voice of the Global Demolition Industry

HYDRARAM®

DEMOLITION & RECYCLING EQUIPMENT

HYDRARAM b.v.
Meander 7
NL-9231 DB Surhuisterveen
The Netherlands

Tel. +31 512-365981
Fax +31 512-365761
www.hydraram.com
info@hydraram.com

*SPECIFICATIONS IN THIS BROCHURE ARE SUBJECT TO CHANGE WITHOUT NOTICE

FSC www.fsc.org FSC® C103631

DL/0814